ZADL-07

Explosion Proof Aviation Connector

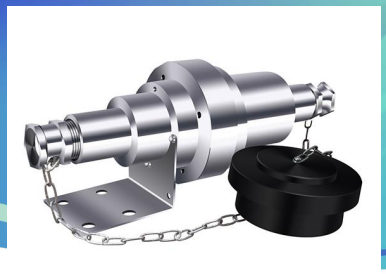

Certificate

Certificate Mark	Ex dⅡC T6 Gb/ DIP A20 TA, T6
Certificate No	CNEx12.3716
Standards	Q/320412ZAF041-2012

Mechanical

Housing	Stainless steel 304
IP	IP65
couple	Male part, female part
Cable thread	2* G3/4
Working temperature	-25 ---+65℃

Electrical

Voltage	AC100-240V, AC24V
Working current	≦2A
communication	7-core (3-core power, 2-core video, 2-core RS485)
	12-core (network type)

General

Size	247*86*100mm
Weight	2kg

Dimension

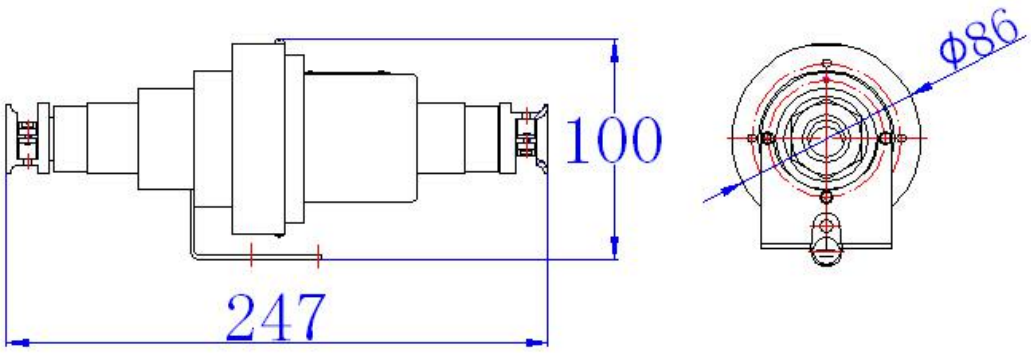

ZUOAN